Ship loose items:
NONE

*NOTE: ALL ELEVATIONS ARE PULLED FROM WELD SEAM FOR EASE OF FABRICATION

*NOTE:
NOZZLES N1b, N4b, N5b, S1, S2 & INTERNAL MESH TO BE PROVIDED BY CUSTOMER.

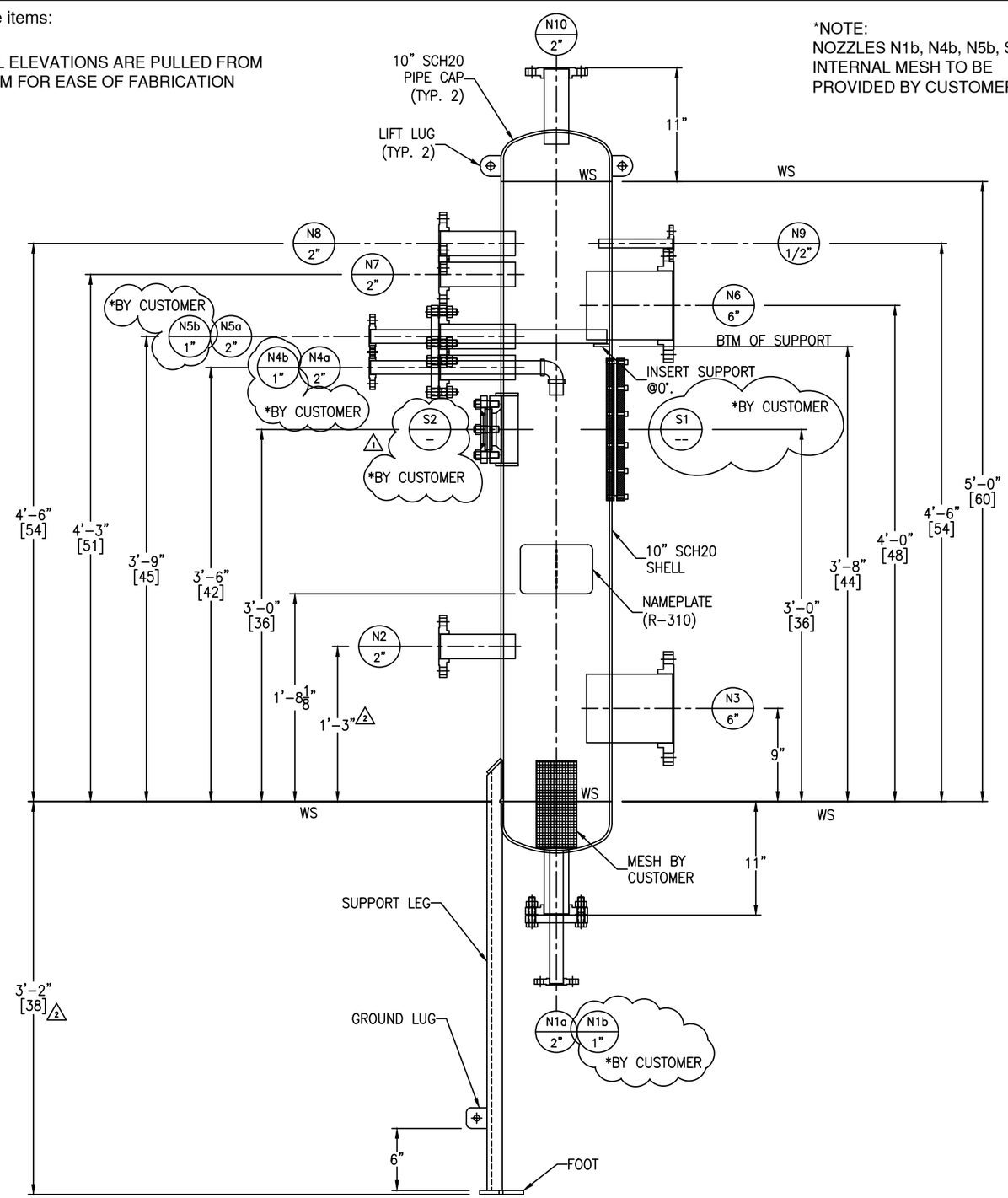

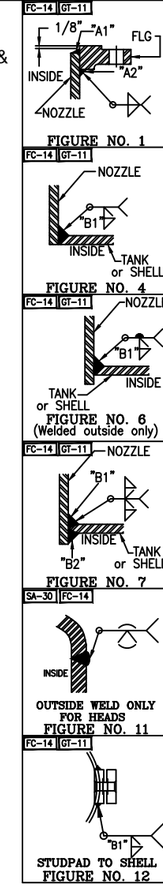

NOZZLE SCHEDULE

MARK	SERVICE	SIZE	RATING	TYPE / STYLE	NECK SCHED.	PROJECTION EXT. (℄)	PROJECTION INT. (MIN.)	WELD FIGURE	REPAD SIZE (WIDTH X THK.)	WELD SIZE "A1"	"A2"	"B1"	"B2"	"C1"	"C2"
N1a	N1b BASE NOZZLE	2"	150#	RFSO W/ BLIND	40S	SEE DWG	–	1,4	–	3/16	1/4	3/16	–	–	–
N1b	LIQUID INLET/OUTLET	1"	150#	RFSO	40S	SEE DWG	SEE DWG	1,7	–	3/16	3/16	3/16	3/16	–	–
N2	dP LEVEL TRANSMITTER	2"	150#	RFSO	40S	6"	1"	1,6	–	3/16	1/4	3/16	–	–	–
N3	CATALYST REMOVAL	6"	150#	RFSO	40S	6"	1"	1,6	–	3/16	3/16	3/16	–	–	–
N4a	N4b BASE NOZZLE	2"	150#	RFSO W/ BLIND	40S	6"	1"	1,6	–	3/16	1/4	3/16	–	–	–
N4b	LIQUID INLET	1"	150#	RFSO	40S	SEE DWG	SEE DWG	1,7	–	3/16	3/16	3/16	3/16	–	–
N5a	N5b BASE NOZZZLE	2"	150#	RFSO W/ BLIND	40S	6"	1"	1,6	–	3/16	3/16	3/16	–	–	–
N5b	BALANCING LINE	1"	150#	RFSO	40S	SEE DWG	SEE DWG	1,7	–	3/16	3/16	3/16	3/16	–	–
N6	CATALYST ADDITION	6"	150#	RFSO	40S	6"	1"	1,6	–	3/16	1/4	3/16	–	–	–
N7	LEVEL SWITCH	2"	150#	RFSO	40S	6"	1"	1,6	–	3/16	3/16	3/16	–	–	–
N8	dP LEVEL TRANSMITTER	2"	150#	RFSO	40S	6"	1"	1,6	–	3/16	1/4	3/16	–	–	–
N9	NITROGEN	1/2"	150#	RFSO	40S	6"	1"	1,6	–	3/16	3/16	3/16	–	–	–
N10	VAPOR OUTLET	2"	150#	RFSO	40S	SEE DWG	1"	1,6	–	3/16	3/16	3/16	–	–	–
S1	ERNST LEVEL GAUGE	–	–	LJ STAR	–	–	–	12	–	–	–	1/4	–	–	–
S2	SIGHT GLASS	–	–	LJ STAR	–	–	–	4	–	–	–	1/4	–	–	–

MATERIALS OF CONSTRUCTION

	VESSEL
SHELL	SA312-304/304L WLD
HEADS	SA403-304/304L WPW
RIM ANGLE	–
NOZZLE NECKS	SA312-304/304L WLD
NOZZLE FLANGES / STUDPAD	SA182F-304/304L
MANWAY NECKS	–
MANWAY FLANGES	–
GASKETS	VITON
BOLTS/STUDS	SA193-B7 (ZINC PLATED)
NUTS	SA194-2H (ZINC PLATED)
REPADS	–
COUPLINGS	–
SUPPORTS/HOLD DOWNS	SA479-304/304L & SA240-304/304L
LIFTING LUGS	SA240-304/304L
INTERNAL SUPPORT	SA240-304/304L
INSULATION RINGS	–
GROUND LUG	SA240-304/304L
BAFFLE	–
LADDER	–
TANK CLIPS (LADDER)	–
HANDRAIL	–
HANDRAIL CLIPS	–
PLATFORM	–
PLATFORM CLIPS	–
DIPTUBE SUPPORT	–
JACKET SHELL	–
JACKET HEADS	–
JACKET NOZZLE NECKS	–
JACKET NOZZLE FLANGES	–

DESIGN DATA

	VESSEL
DESIGN AND FAB. CODE	ASME
CERT. STAMP REQ'D.	YES
DESIGN PRESSURE	125 PSIG / FV
DESIGN TEMPERATURE	536° F
MIN. DESIGN METAL TEMP.	-20° F @ 125 PSIG
OPERATING PRESSURE	–
OPERATING TEMPERATURE	–
JOINT EFFICIENCY HEADS	0.70
JOINT EFFICIENCY SHELL	0.70
CORROSION ALLOWANCE	0"
SPECIFIC GRAVITY	1.02
EARTHQUAKE ZONE	Ss = (0.610) S1 = (0.18)
WIND LOAD	108 MPH
STRESS RELIEF	NOT REQ'D
RADIOGRAPHIC EXAM	NOT REQ'D
DYE PENETRANT EXAM	NOT REQ'D
MAGNETIC PARTICLE EXAM	NOT REQ'D
HYDROSTATIC TEST	163 PSIG / GAUGE #13
PNEUMATIC TEST	–
JKT HYDRO TEST	–
JKT DESIGN AND FAB. CODE	–
JKT CERT. STAMP REQ'D.	–
JKT DESIGN PRESSURE	–
JKT DESIGN TEMPERATURE	–
JKT MIN. DESIGN METAL TEMP.	–
JKT OPERATING PRESSURE	–
JKT OPERATING TEMPERATURE	–
JKT JOINT EFFICIENCY HEADS	–
JKT JOINT EFFICIENCY SHELL	–

VESSEL FINISH

INTERIOR WELD TREATMENT:	SAV TANK STANDARD
EXTERIOR WELD TREATMENT:	SAV TANK STANDARD
SAV TANK FINISHING STANDARD:	SEE NOTE 6
INSULATION:	N/A
PAINTING:	N/A

VESSEL CAPACITY AND WEIGHTS

OPERATING CAPACITY	–
FULL CAPACITY	24 GAL.
EMPTY SHIPPING WEIGHT	550 LBS.
WEIGHT FULL OF WATER	730 LBS.
WEIGHT FULL OF PRODUCT	740 LBS.

ASME SECT. VIII, DIV. 1
2023 EDITION

ENG. _____ DATE: _____
Q.C. _____ DATE: _____
A.I. _____ DATE: _____

This drawing is issued for customer approval. please review, make approval changes (if any) in red. check the appropriate box, sign & date.

- ☐ Approval – no changes. Please proceed with fabrication.
- ☐ Approved as noted. Please proceed with fabrication
- ☐ Not approved. Please make changes and resubmit.

Customer signature _____ Date _____

GENERAL NOTES

1.) COVER ALL FLANGES, OPENINGS & MACHINED SURFACES PRIOR TO SHIPMENT UNLESS OTHERWISE NOTED.
2.) BOLT HOLES TO STRADDLE 0° & 180° UNLESS OTHERWISE NOTED.
3.) REPADS TO HAVE (1) ø1/4" NPT TELL-TALE HOLES FOR PNEUMATIC TESTING AT 2 PSIG FOR PRESSURE RETAINING PARTS. ALL OTHER REPADS TO HAVE (1) ø1/4" WEEP HOLE AT LOWEST POINT ON PAD.
4.) ASME CODE VESSELS TO BE IN ACCORDANCE WITH UG-80 & UG-81. TOLERANCES: +/- 1/8" FOR DIMENSIONS AND +/- 2 DEGREES FOR ORIENTATIONS.
5.) ASME MATERIALS TO CONFORM TO THE FOLLOWING: FLANGES – B16.5, FITTINGS – B16.9 & COUPLINGS – B16.11.
6.) PICKLE ALL EXTERIOR WELDS. PASSIVATE INTERIOR & EXTERIOR OF VESSEL.

REVISIONS

REV	D.BY	C.BY	DATE	DESCRIPTION
				AS BUILT
2	AD	RS	8/22/25	CERTIFIED
1	AD	RS	8/11/25	APPROVAL REV 1
0	RS	NP	7/17/25	APPROVAL

Savannah Tank & Equipment Corp.
1517 Telfair Road, Savannah, GA 31415
(912) 233-8902

DRAWN BY: RS
CHK'D BY: NP
APPROVED BY: NP
SCALE: 1 1/2" = 1'-0"

EPIC SYSTEMS GROUP LLC.
PACKED BED REACTOR
EQUIP. # R-310
CUST. PO #63958

DRAWING NO.: 078-25-1 SHT 1 OF 4 REV. SET 2

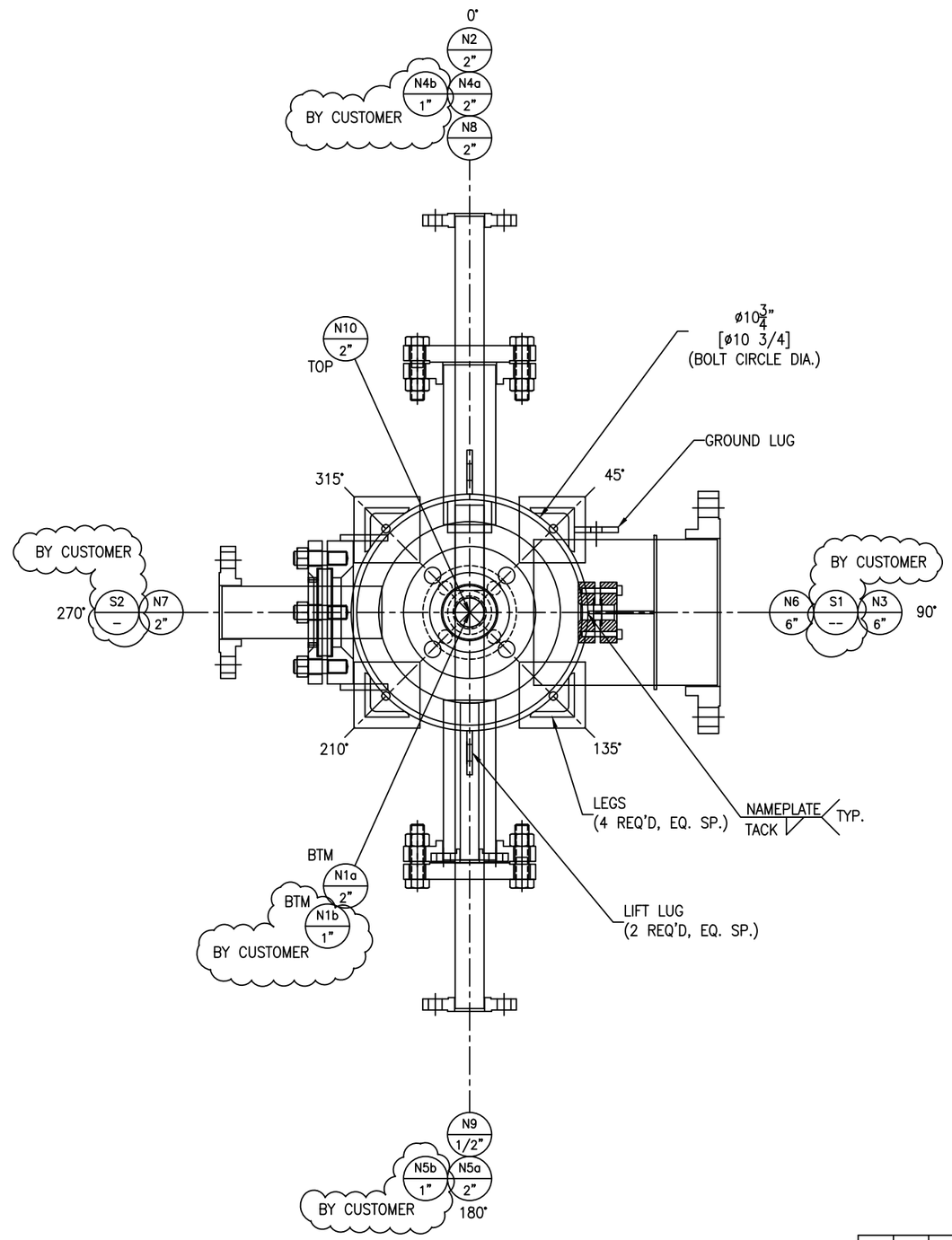

Bolting for blinds
N1a,N4a, N5a:
(4+4+4) 5/8"-11 NC x 2 1/2" HH BOLT
(4+4+4) 5/8"-11 NC HH NUT
(1+1+1) 2" 150# RING GASKET X 1/8" THK.

REV	D.BY	C.BY	DATE	DESCRIPTION
				AS BUILT
2	AD	RS	8/22/25	CERTIFIED
1	AD	RS	8/11/25	APPROVAL REV 1
0	RS	NP	7/17/25	APPROVAL

⚠ REVISIONS

Savannah Tank & Equipment Corp.
1517 Telfair Road, Savannah, GA 31415
(912) 233-8902

DRAWN BY: RS
CHK'D BY: NP
APPROVED BY: NP
SCALE: 3" = 1'-0"

EPIC SYSTEMS GROUP LLC.
PACKED BED REACTOR
EQUIP. # R-310
CUST. PO #63958

DRAWING NO.: 078-25-2 SHT 2 OF 4 REV. SET 2

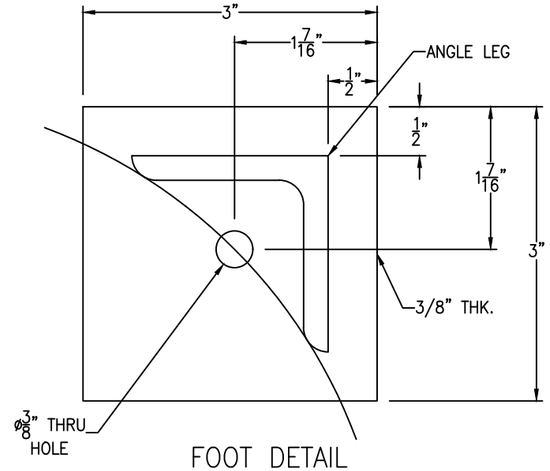

FOOT DETAIL

(4 REQ'D) SCALE: 1'–0" = 1'–0"

FC–14

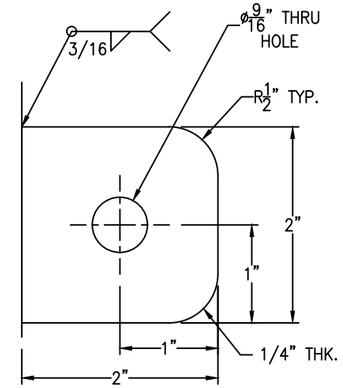

GROUND LUGS ARE LOCATED @ 45°.

GROUND LUG DETAIL

(1 REQ'D) SCALE: 1'–0" = 1'–0"

FC–14

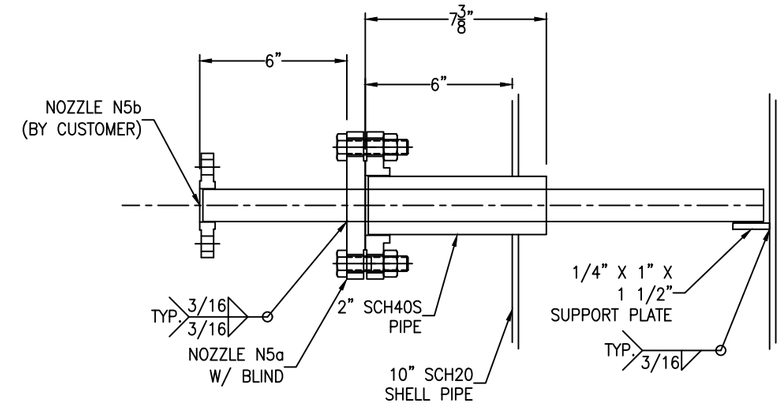

NOZZLE N5a & N5b DETAIL

SCALE: 3" = 1'–0"

FC–14

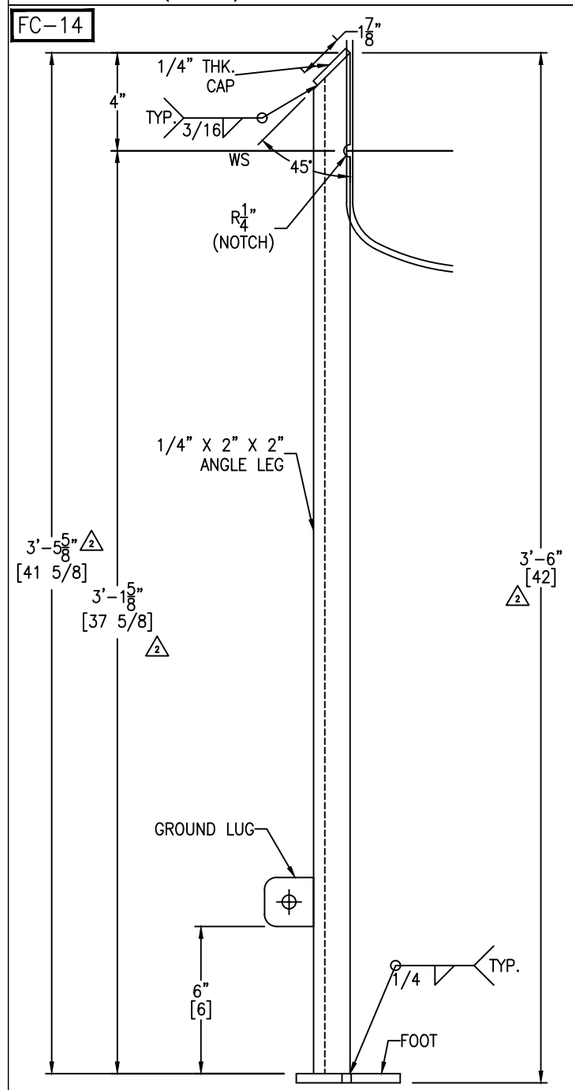

LEG DETAIL

(4 REQ'D) SCALE: 3" = 1'–0"

FC–14

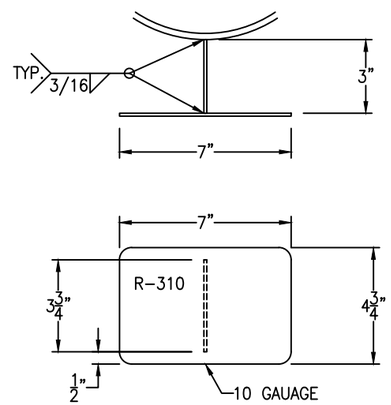

NAMEPLATE DETAIL

SCALE: 3" = 1'–0"

FC–14

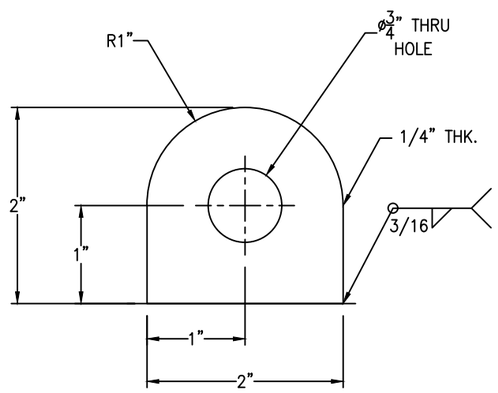

LIFT LUG DETAIL

(2 REQ'D) SCALE: 1'–0" = 1'–0"

FC–14

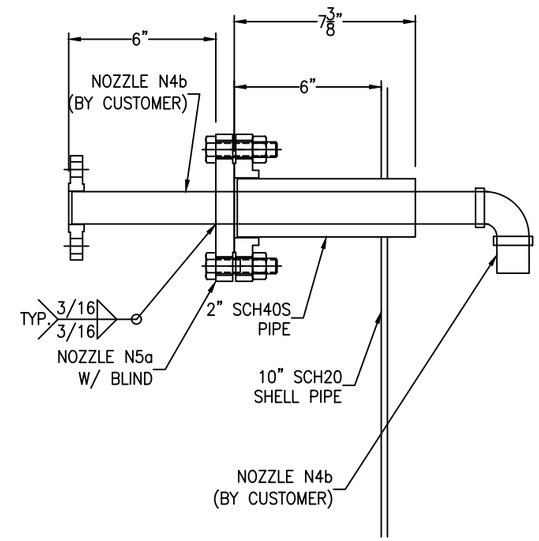

NOZZLE N4a & N4b DETAIL

SCALE: 3" = 1'–0"

FC–14

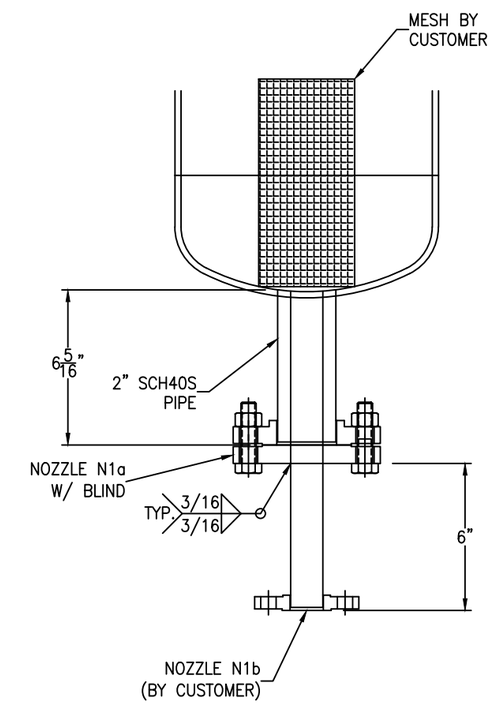

NOZZLE N1a & N1b DETAIL

SCALE: 3" = 1'–0"

REV	D.BY	C.BY	DATE	DESCRIPTION
				AS BUILT
2	AD	RS	8/22/25	CERTIFIED
1	AD	RS	8/11/25	APPROVAL REV 1
0	RS	NP	7/17/25	APPROVAL

⚠ REVISIONS

Savannah Tank & Equipment Corp.
1517 Telfair Road, Savannah, GA 31415
(912) 233–8902

DRAWN BY: RS
CHK'D BY: NP
APPROVED BY: NP
SCALE: 1 1/2" = 1'–0"

EPIC SYSTEMS GROUP LLC.
PACKED BED REACTOR
EQUIP. # R–310
CUST. PO #63958

DRAWING NO.: 078–25–3 SHT 3 OF 4 REV. SET 2

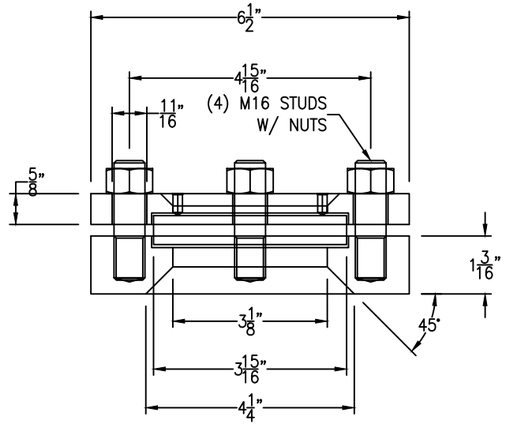

CIRCULAR SIGHT GLASS: LJ STAR SIZE DN50.

SIGHTGLASS S2 DETAIL

SCALE: 6" = 1'-0"

FC-14

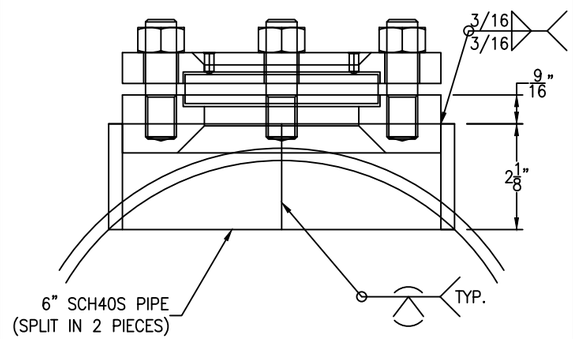

CIRCULAR SIGHT GLASS: LJ STAR SIZE DN50.

SIGHTGLASS S2 WELD DETAIL

SCALE: 6" = 1'-0"

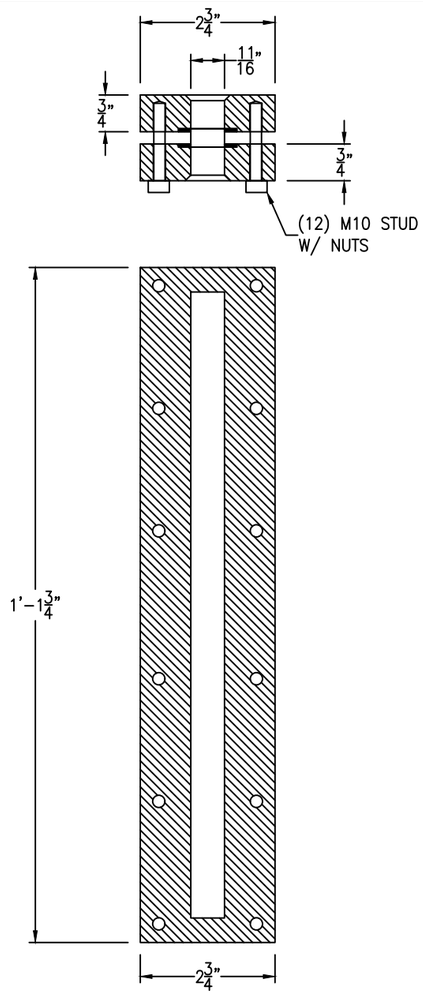

RECTANGULAR SIGHT GLASS: LJ STAR SIZE 3.

LEVEL GUAGE S1 DETAIL

SCALE: 6" = 1'-0"

REV	D.BY	C.BY	DATE	DESCRIPTION
				AS BUILT
2	AD	RS	8/22/25	CERTIFIED
1	AD	RS	8/11/25	APPROVAL REV 1
0	RS	NP	7/17/25	APPROVAL

△1 REVISIONS

Savannah Tank & Equipment Corp.
1517 Telfair Road, Savannah, GA 31415
(912) 233-8902

DRAWN BY: RS
CHK'D BY: NP
APPROVED BY: NP
SCALE: 1 1/2" = 1'-0"

EPIC SYSTEMS GROUP LLC.
PACKED BED REACTOR
EQUIP. # R-310
CUST. PO #63958

DRAWING NO.: 078-25-4 SHT 4 OF 4 REV. SET 2